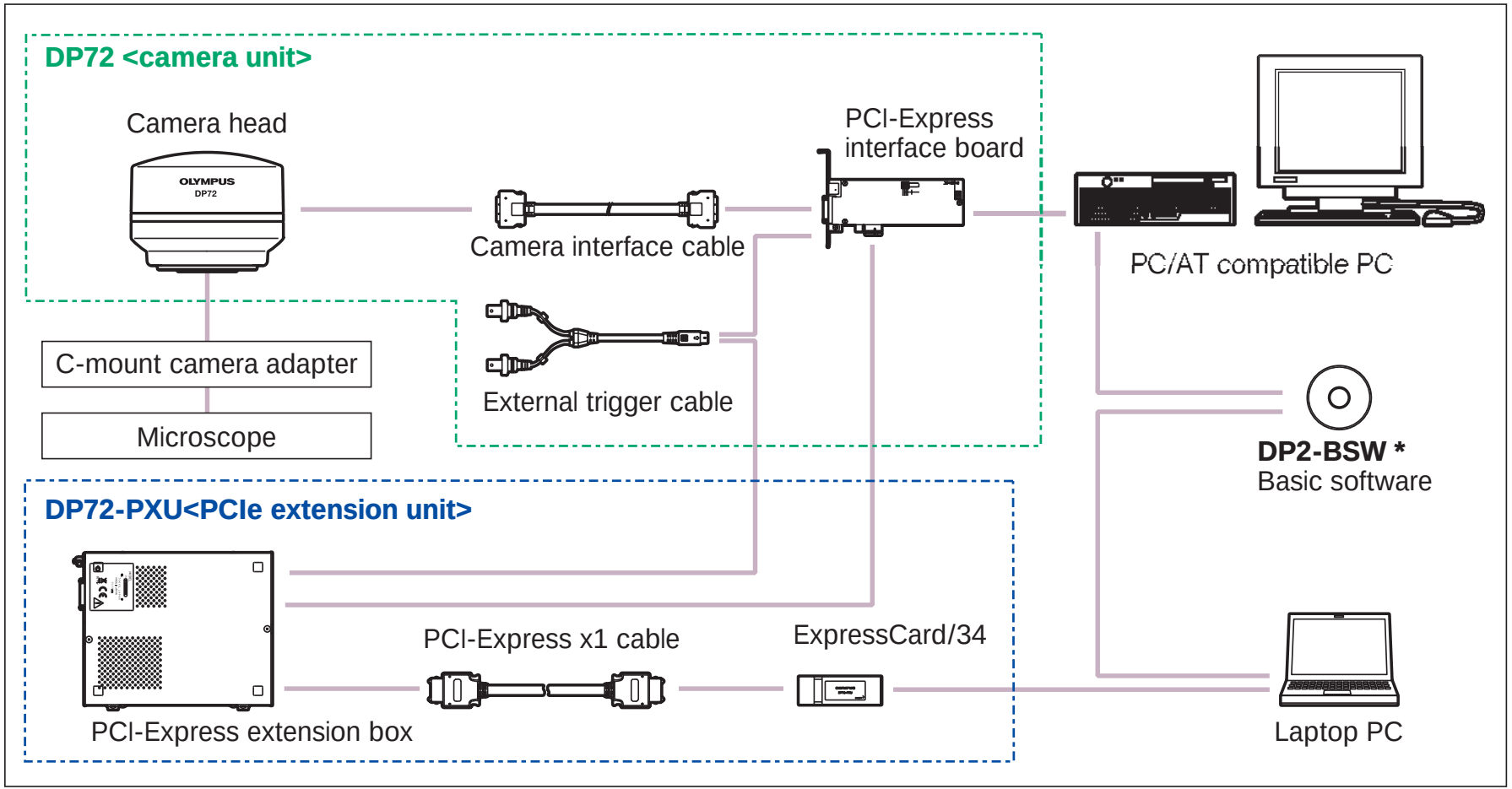SYSTEM DIAGRAM